NOTES: UNLESS OTHERWISE SPECIFIED

REVISIONS			
LTR	DESCRIPTION	DATE	APPROVED

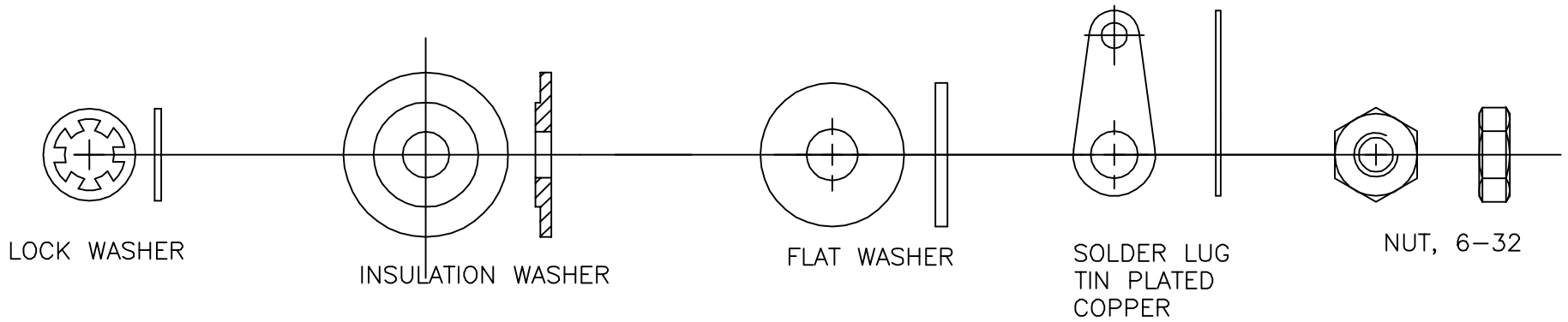

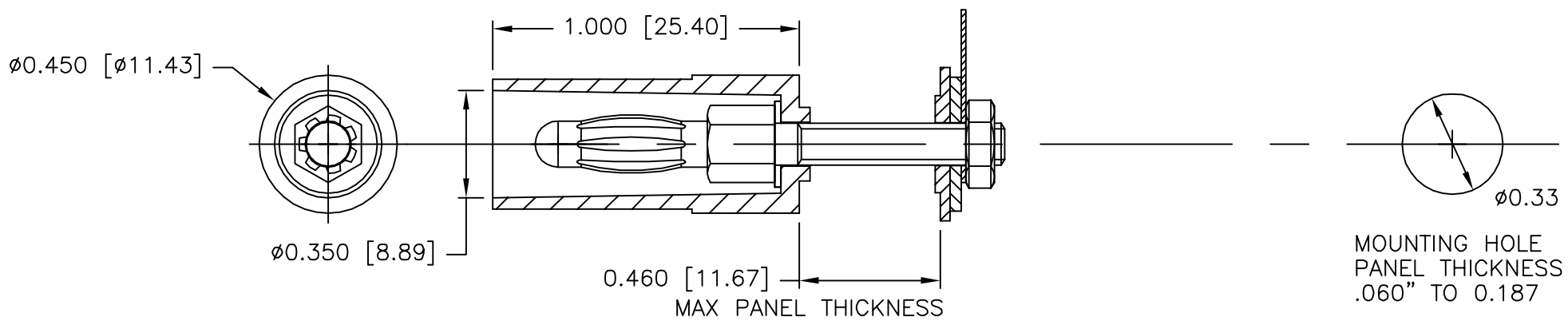

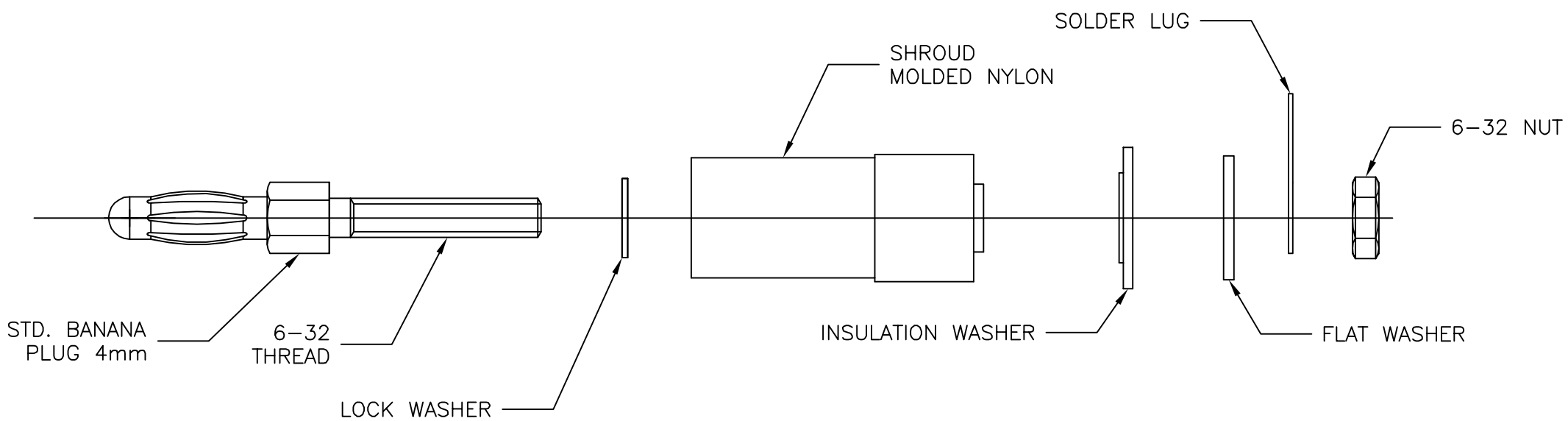

		UNLESS OTHERWISE SPECIFIED DIMENSIONS ARE IN INCHES TOLERANCES ARE: FRACTIONS ± DECIMALS .XX ± .XXX ± ANGLES ±	CONTRACT NO.	E-Z-HOOK DIVISION OF TEKTEST INC. ARCADIA, CA 91006 U.S.A.
			APPROVALS / DATE	
			DRAWN	DESCRIPTION BANANA PLUG PANEL MOUNT, SHROUDED
		MATERIAL	APPROVED BY	
		FINISH		SIZE B / CODE IDENT NO. 08505 / DRAWING NO. 8209 / REV.
NEXT ASSY	USED ON			
APPLICATION		DO NOT SCALE DRAWING		SCALE 2X / SHEET OF

THE INFORMATION CONTAINED IN THIS DOCUMENT IS PROPRIETARY TO E-Z-HOOK. THE INFORMATION IS NOT TO BE REPRODUCED WITHOUT PRIOR WRITTEN PERMISSION OF E-Z-HOOK, DIV. OF TEKTEST INC.